Trouble model: iPad5

Symptom: No power is turned off when the screen is replaced.

Fault Analysis: This machine is not disconnected from the battery when the LCD(LED) panel in screen is replaced by the VCC, causing the boot to not respond and not displayed.Disassemble the machine under the microscope as shown

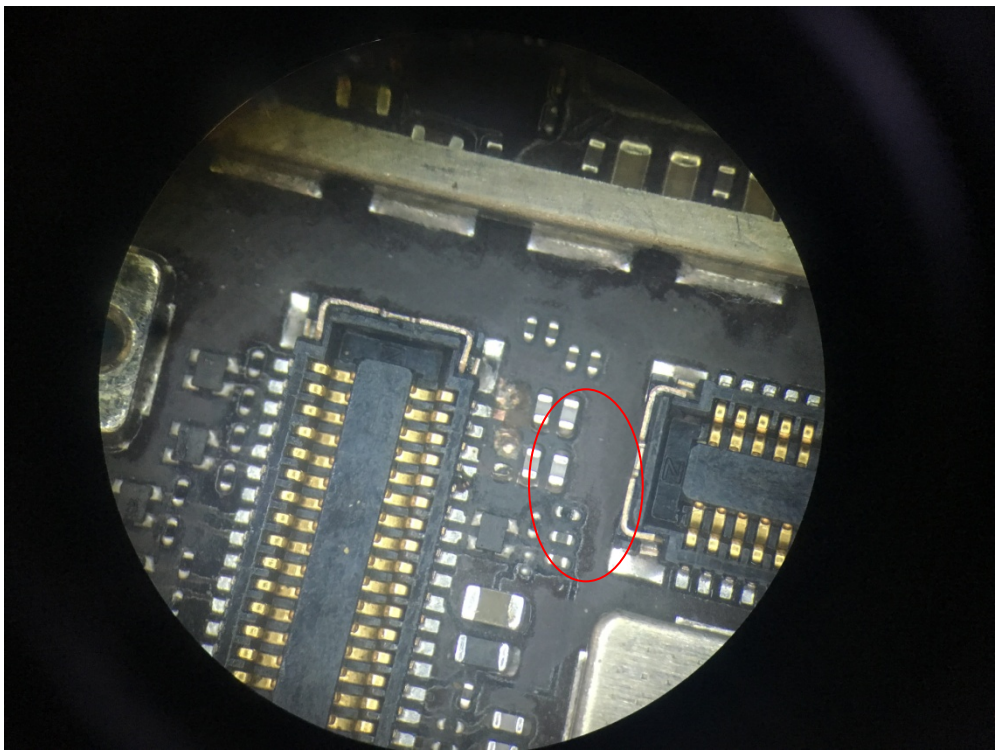

Already even solder pad is gone, check Boardview found that it is backlight VCC Inductor.

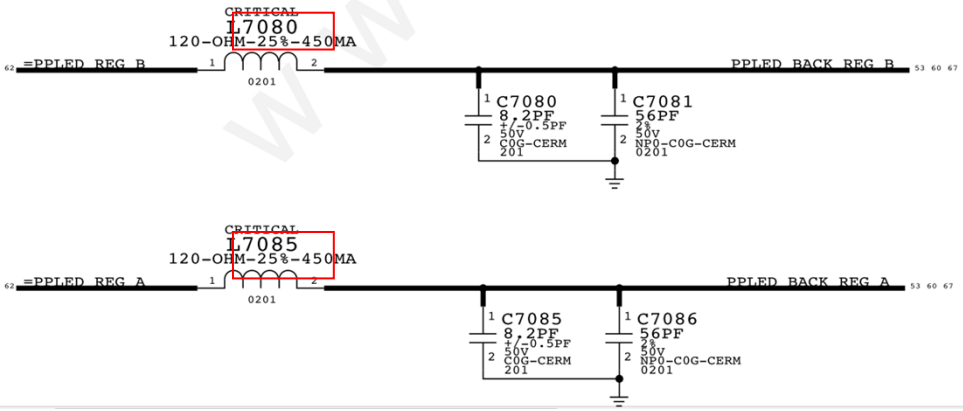

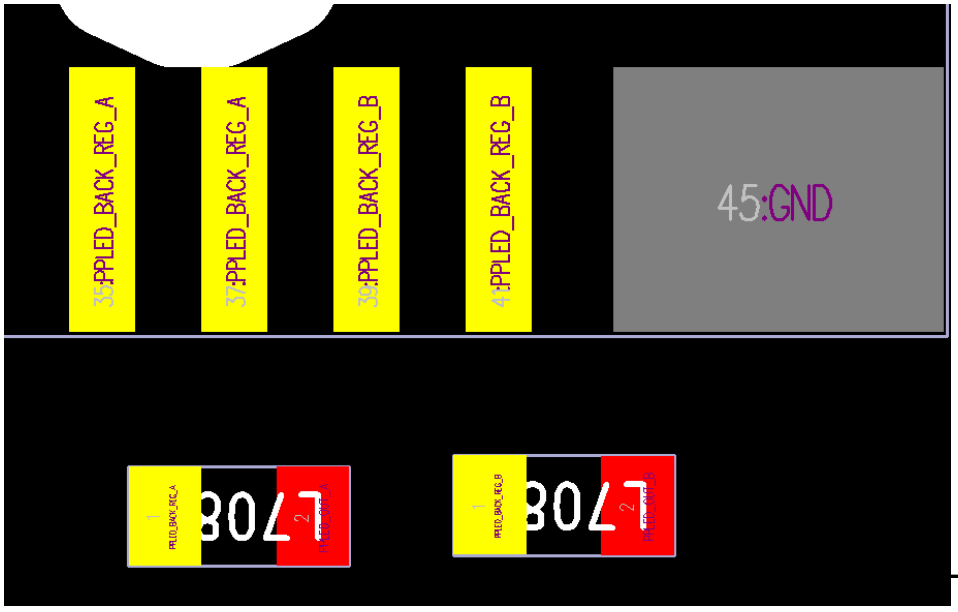

The Inductor can be directly connected. Since the solder pad is gone, the line that can see the via can only find the trace down, and the insulated paint (green oil) is fixed.

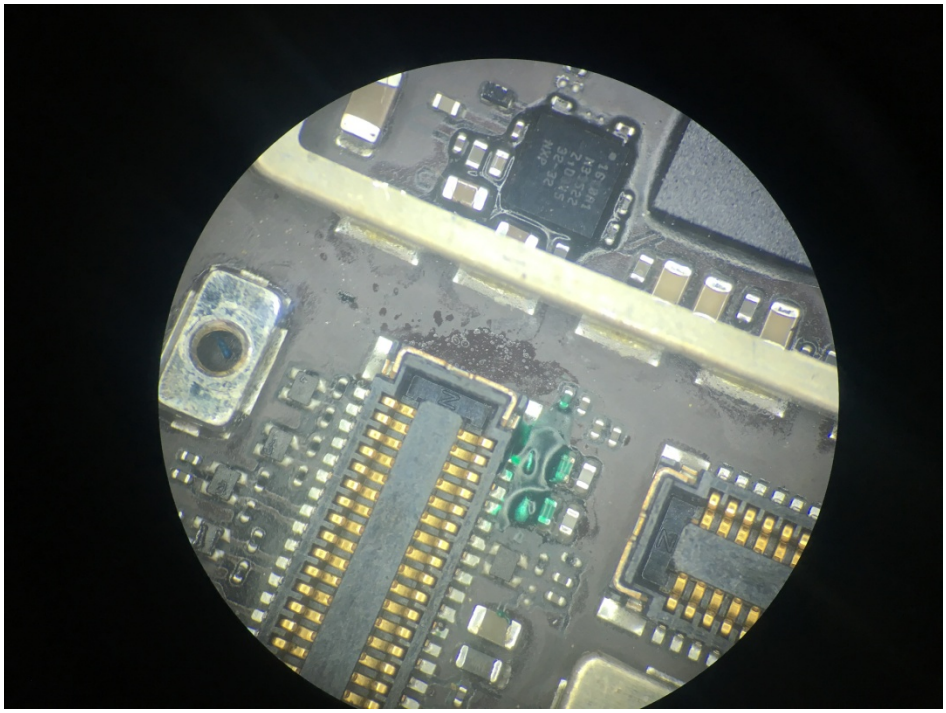

The machine is turned on normally.

